Downloaded by
RadioAmateur.EU

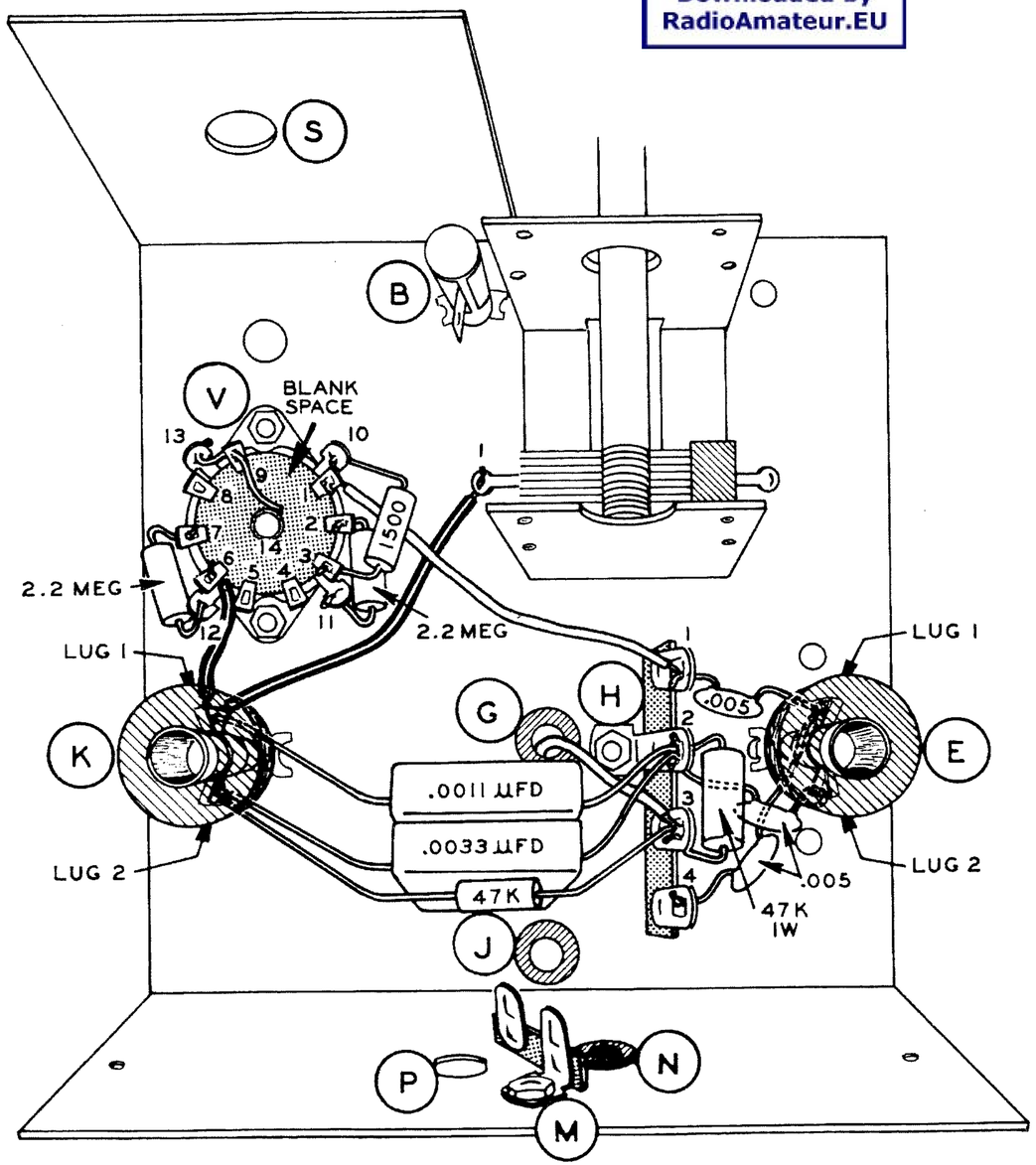

Pictorial 1

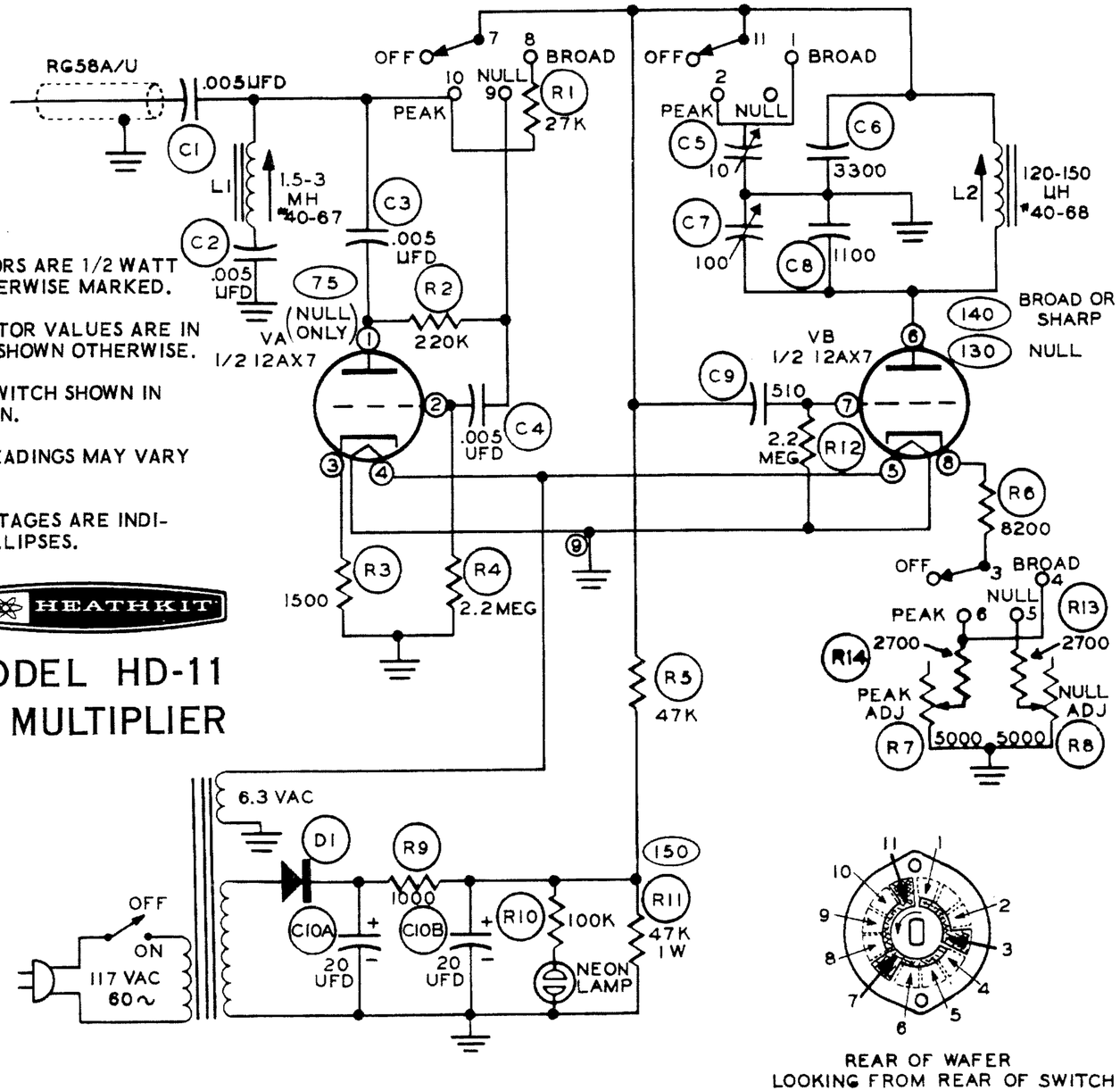

ALL RESISTORS ARE 1/2 WATT UNLESS OTHERWISE MARKED.

ALL CAPACITOR VALUES ARE IN µµf UNLESS SHOWN OTHERWISE.

FUNCTION SWITCH SHOWN IN OFF POSITION.

VOLTAGE READINGS MAY VARY ±20%.

ALL DC VOLTAGES ARE INDICATED IN ELLIPSES.

HEATHKIT

MODEL HD-11
Q MULTIPLIER